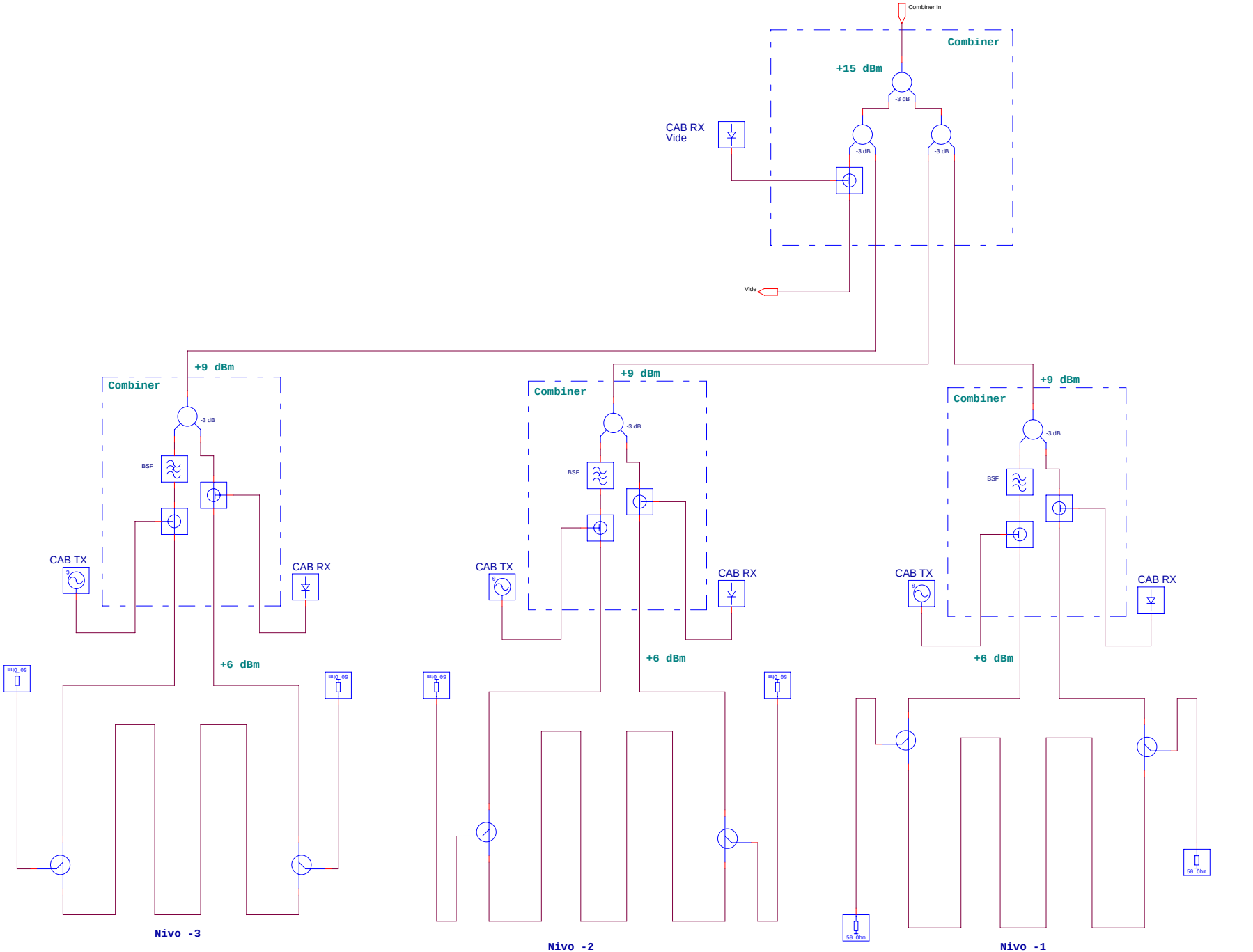

Nivo -3

23 dB Kabelverlies760 meter 7/8" RLKW

Nivo -2

23 dB Kabelverlies 760 meter 7/8" RLKW

Nivo -1

23 dB Kabelverlies 760 meter 7/8" RLKW

Title	Ontwerp Museumpark
Size A2	Document Number Infrater 2008/03/04 rev aug
Rev	1.30
Date:	Sheet 1 of 1