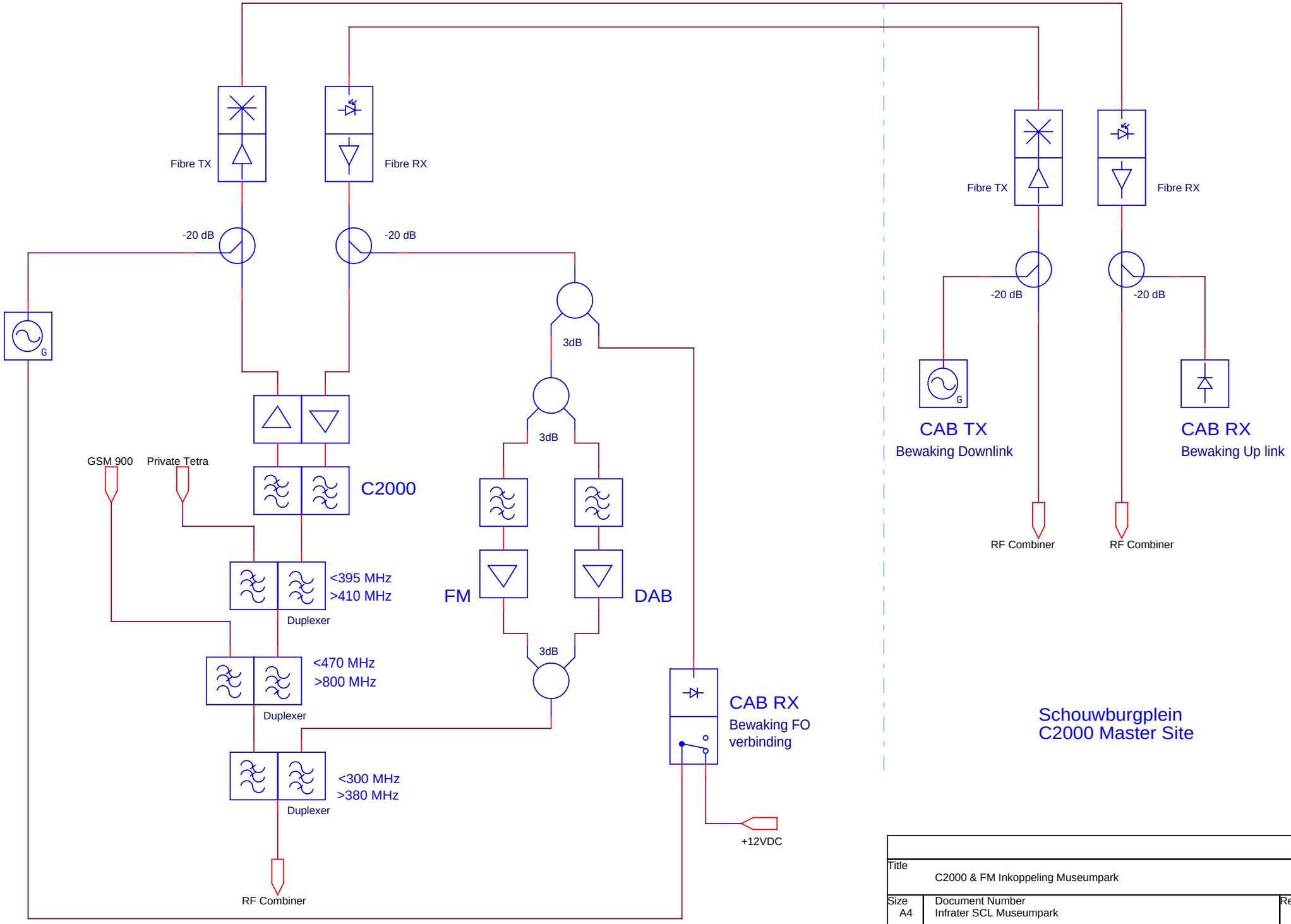

Title	C2000 & FM Inkoppeling Museumpark	
Size A4	Document Number Infrater SCL Museumpark	Rev 1.1
Date: Monday, December 14, 2009	Sheet 1 of 1	